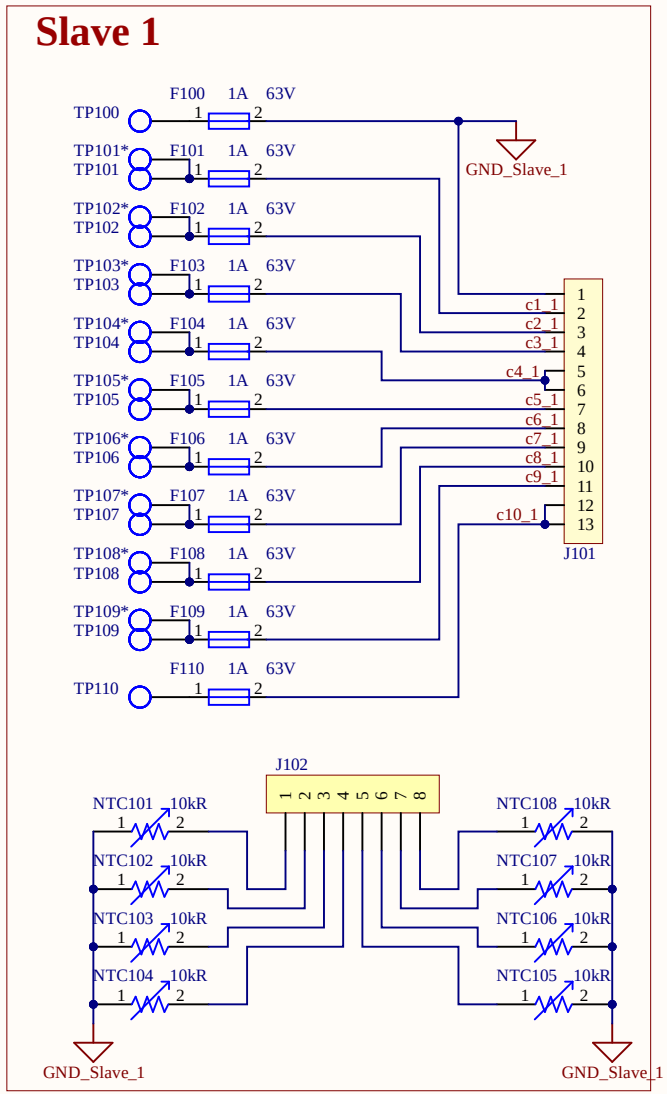

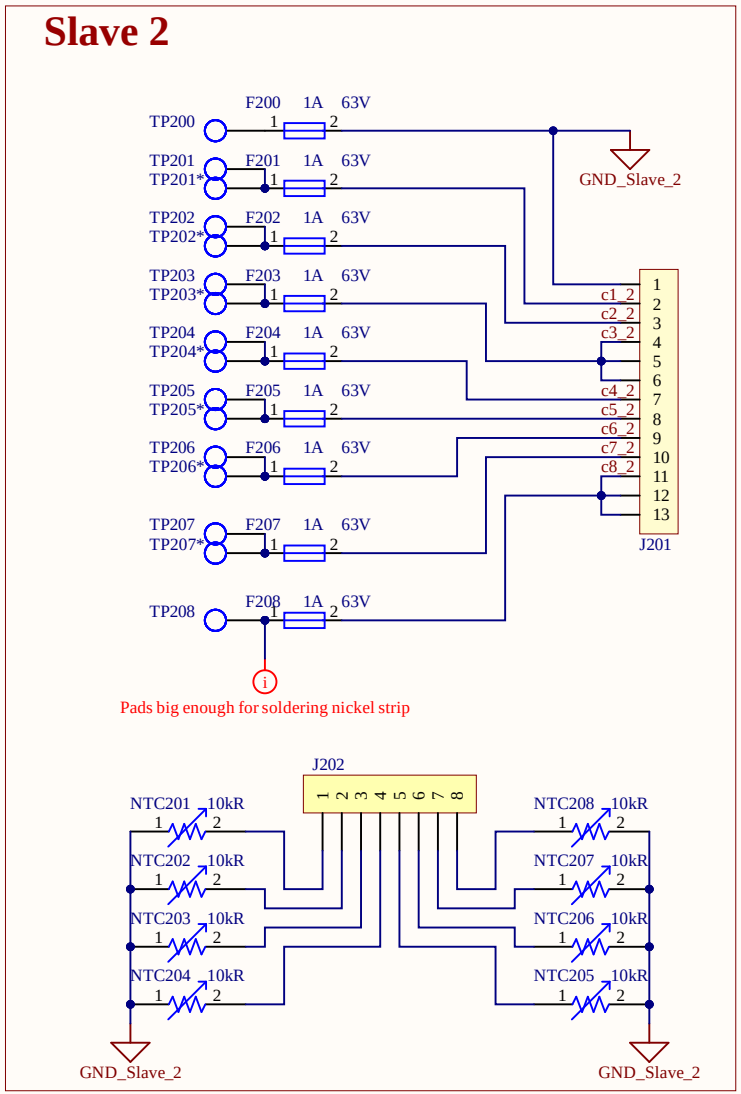

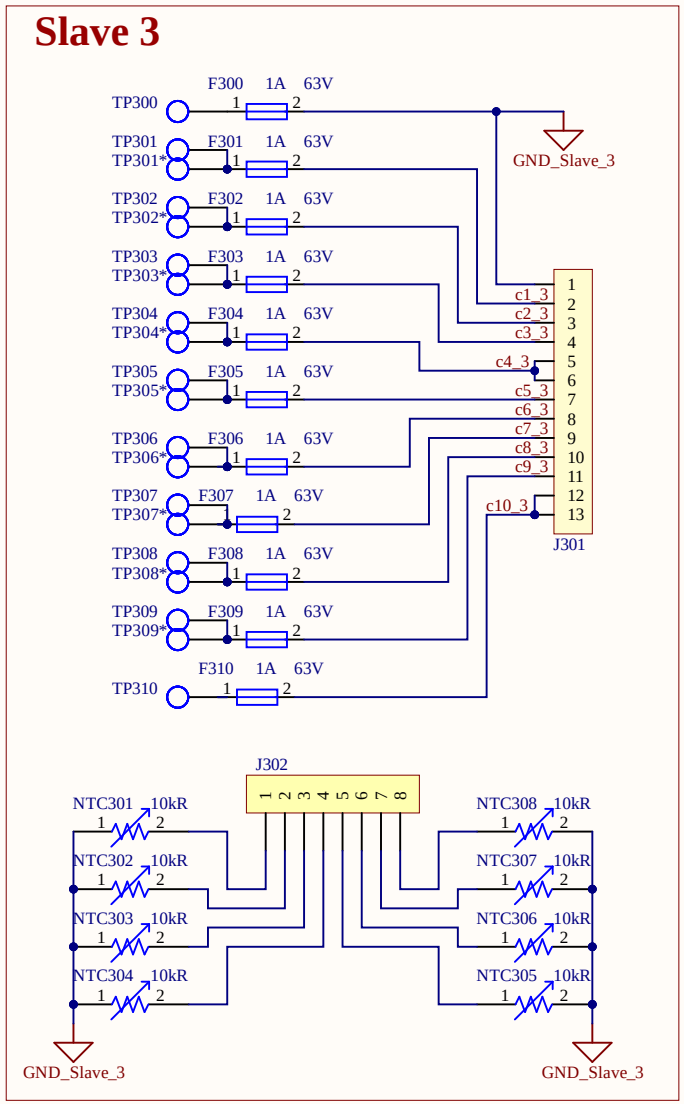

Company: e-Tech Racing	e-techracing.es		
Project: Accumulator_HotDog	Variant: [No Variations]		
Size: -	Page Contents: Accumulator_HotDog_v2.SchDoc	Version: 2.0	
		Department: Accumulator-BMS	
Author: Inass Himmiche	inass.himmiche@estudiantat.upc.edu	Sheet 1 of 1	
Checked by: B r C C r		Date: 18/01/2024	

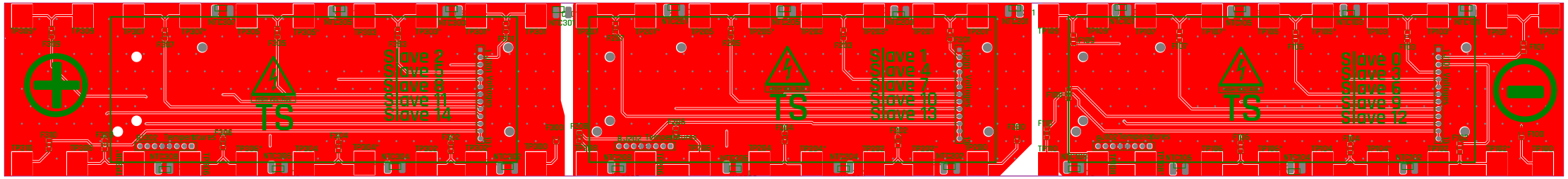
Slave 2
Slave 5
Slave 8
Slave 11
Slave 14
TS
Slave 1
Slave 4
Slave 7
Slave 10
Slave 13
TS
Slave 0
Slave 3
Slave 6
Slave 9
Slave 12
TS

Powertrain Never Rests

TECH RACING
FORMULA STUDENT TEAM
Inspr Hinmsche - 2024

Accumulator HotDog

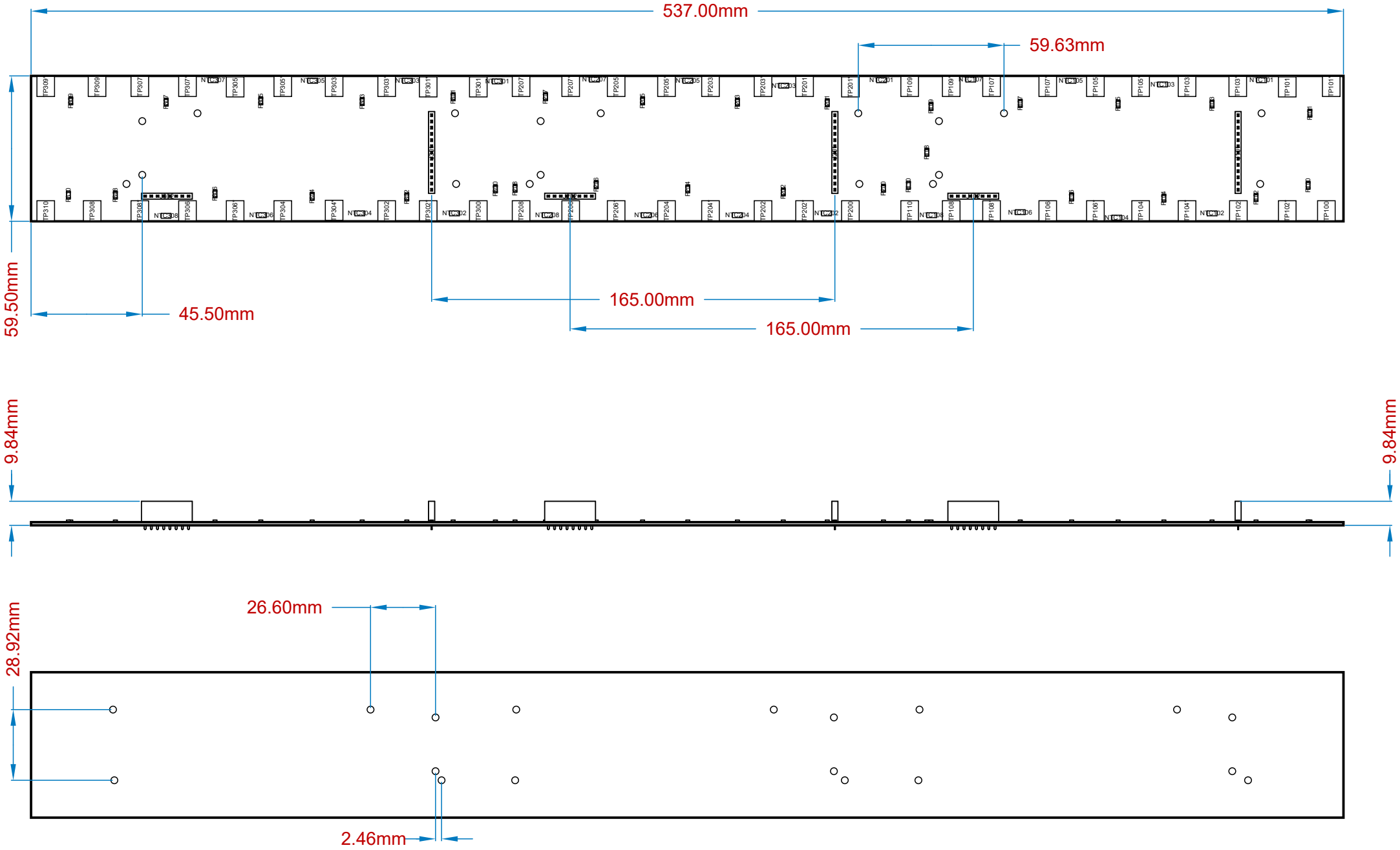
537.00mm
59.63mm
59.50mm
45.50mm
165.00mm
165.00mm
9.84mm
9.84mm
28.92mm
26.60mm
2.46mm

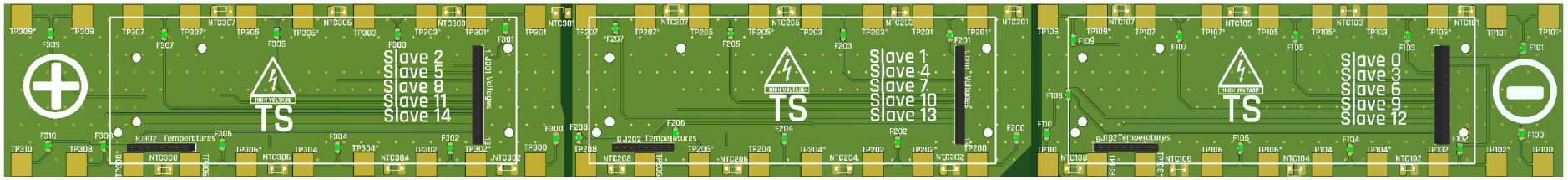
Slave 2
Slave 5
Slave 8
Slave 11
Slave 14
TS
Slave 1
Slave 4
Slave 7
Slave 10
Slave 13
TS
Slave 0
Slave 3
Slave 6
Slave 9
Slave 12
TS

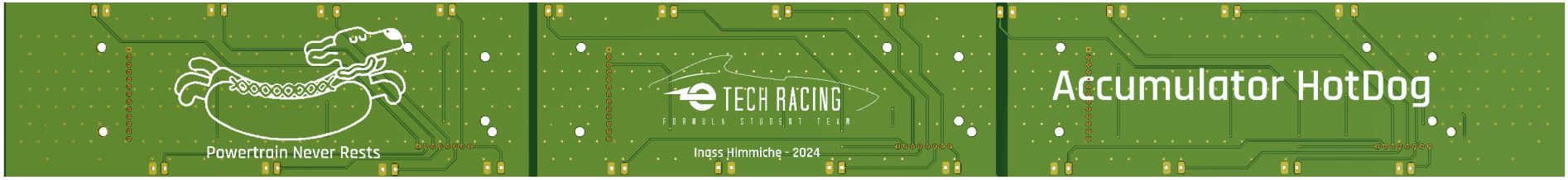
Powertrain Never Rests
TECH RACING
FORMULA STUDENT TEAM
Inass Himmiche - 2024
Accumulator HotDog

Line #	Designator	Name	Quantity
	F100, F101, F102, F103, F104, F105, F106, F107, F108, F109, F110, F200, F201, F202, F203, F204, F205, F206, F207, F208, F300, F301, F302, F303, F304, F305, F306, F307, F308, F309, F310	0437001.WRA	31
	J101, J201, J301	WR-PHD 13 socket header	3
	J102, J202, J302	J_WR-PHD 8pin Socket Header	3
	NTC101, NTC102, NTC103, NTC104, NTC105, NTC106, NTC107, NTC108, NTC201, NTC202, NTC203, NTC204, NTC205, NTC206, NTC207, NTC208, NTC301, NTC302, NTC303, NTC304, NTC305, NTC306, NTC307, NTC308	NXRT15XV103FA1B040	24

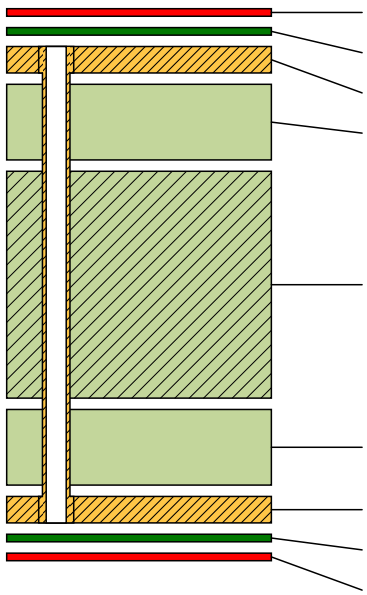

Material	Layer	Thickness	Dielectric Material	Type	Gerber
	Top Overlay			Legend	GTO
Surface Material	Top Solder	0.01mm	Solder Resist	Solder Mask	GTS
Copper	**Top Layer**	**0.04mm**		**Signal**	**GTL**
Prepreg		*0.10mm*	*PP-006*	*Dielectric*	
		1.00mm	*FR-4*	*Dielectric*	
Prepreg		*0.10mm*	*PP-006*	*Dielectric*	
Copper	**Bottom Layer**	**0.04mm**		**Signal**	**GBL**
Surface Material	Bottom Solder	0.01mm	Solder Resist	Solder Mask	GBS
	Bottom Overlay			Legend	GBO

Total thickness: 1.29mm

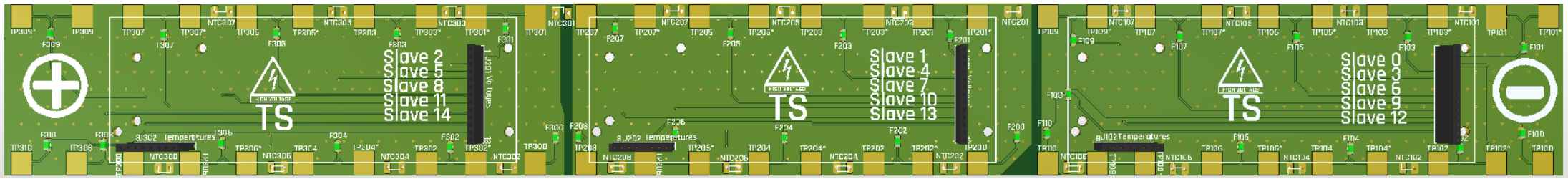
Slave 2
Slave 5
Slave 8
Slave 11
Slave 14
TS
Slave 1
Slave 4
Slave 7
Slave 10
Slave 13
TS
Slave 0
Slave 3
Slave 6
Slave 9
Slave 12
TS